Aqua air 1.5kW

Air heater is for instance used for air massage in spa pools. The incoming air is heated and mixed with the water.

The heater has a power output of 1.5 kW and is made of acid proof stainless steel.
Supplied as standard with a thermostat and overheating cut out.

1-phase 230V.

Suitable for all types of hot tubs and spas.

Technical data

Item no.	kW	Length mm	Pipe connection	Amp.	kg
12700	1.5	360	Ø 51 mm	7	2.5

Features

- Made of acid proof stainless steel
- Minimal dimensions
- Adjustable thermostat 30-80°C
- Heating element acid proof stainless steel
- Overheating cut out
- Ø 51 mm pipes

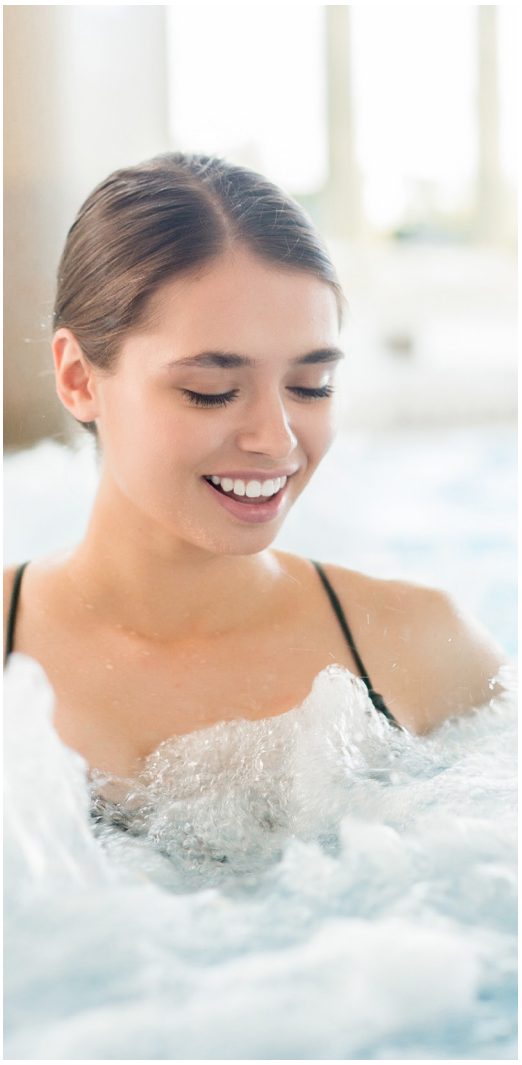

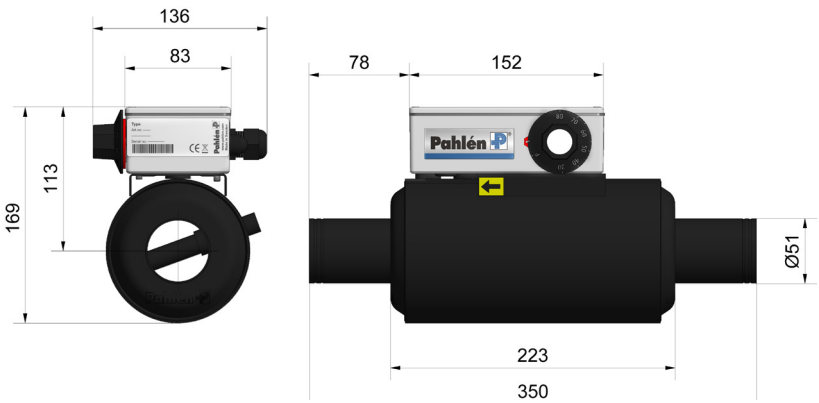

Heat the incoming air in your hot tub easily and effectively with Pahlén's electric air heater.